Final Presentation

Group 1

Project Motivation & Outcome

Intended Motivation:

- **Goal:** build a simple, low-cost **sEMG-based Human–Machine Interface (HMI)** that converts muscle activation into intuitive control signals.

- **Engineering challenge:** sEMG is **low amplitude and noisy**, so the key is reliable **differential amplification + filtering + envelope extraction** before digitising and controlling outputs.

Intended outcome:

- A **single-channel** sEMG pipeline that produces a stable “activation level” (envelope/MAV estimate).

- Arduino uses **ADC + control mapping** to drive **two audio-visual outputs** (minimum requirement):
- **LED feedback** (level/brightness)
- Audio Feedback (tone/beep changes with activation)

Ethical & safety considerations

- **Electrical safety:** electrodes used only with **battery-powered** system and after supervisor check; avoid mains-powered connection to the body.
- **Risk:** on-body tests while connected to mains-referenced equipment (oscilloscope/bench PSU/USB laptop) can create an unsafe path to earth; **mitigation:** test on-body only on batteries with all mains instruments disconnected (after supervisor check).
- EMG signals are processed in real-time to prevent privacy issue.

Analog Input Circuit

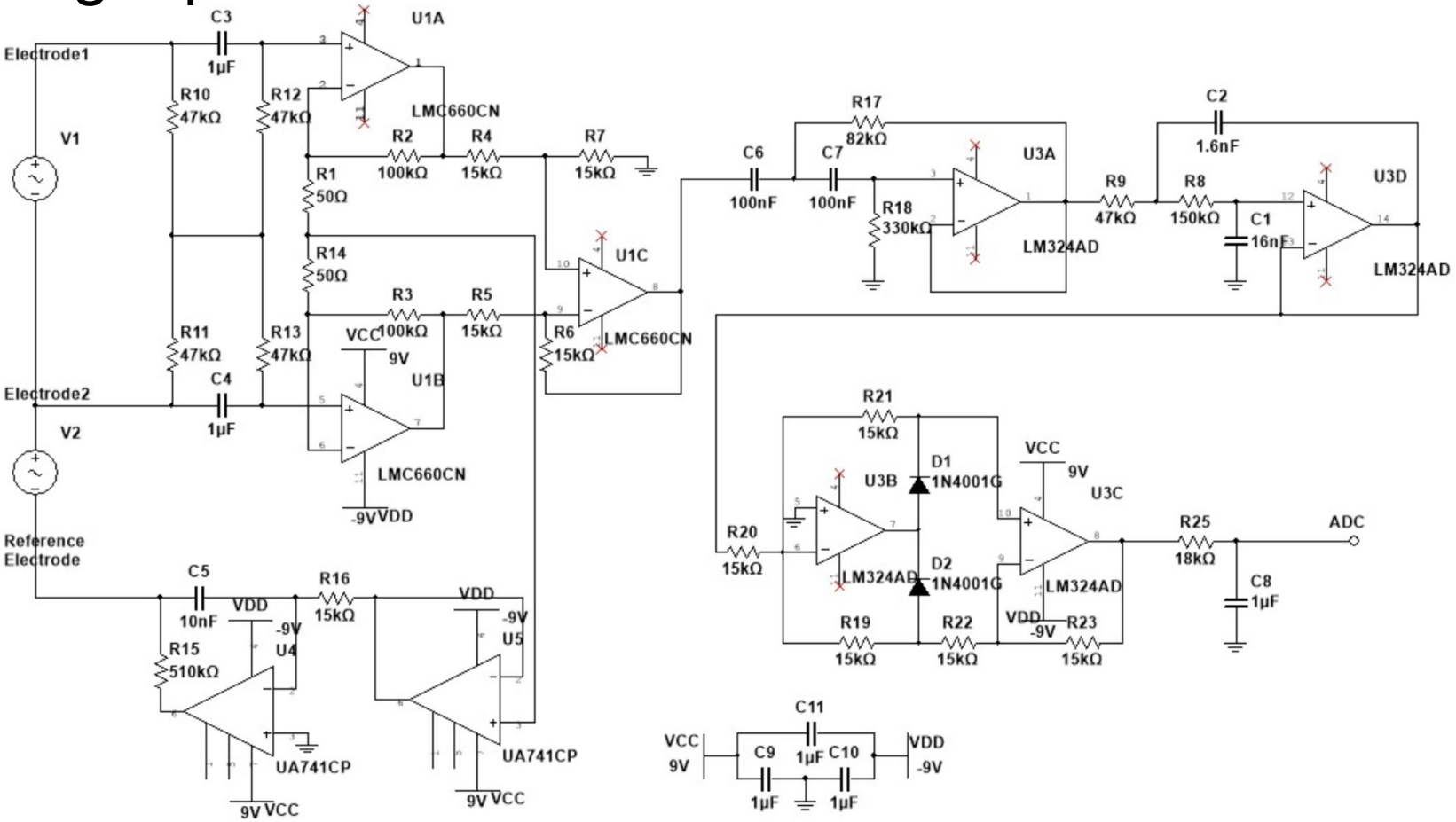

Output circuit Design Choice

- **<u>LED:</u>** Arduino D6–D13 (outputs) → LED anodes → LED cathodes → 8× current-limiting resistors → GND (current flows when a pin is HIGH: managed by the Arduino code for threshold, lighting that LED).
- **<u>Buzzer:</u>** Arduino D4 (output) → current-limiting resistor (100 ohm) → buzzer (+) → buzzer (-) → GND (current flows when a pin is HIGH: managed by the Arduino code for threshold, managing the frequency of buzzer beeping)
- **<u>Servo Motor:</u>** Arduino D3 (output) → motor signal input → Power supply → motor power in → motor power out (Arduino code mapped the adc values to PWM output. The difference band width of pulses gives different angle changes)

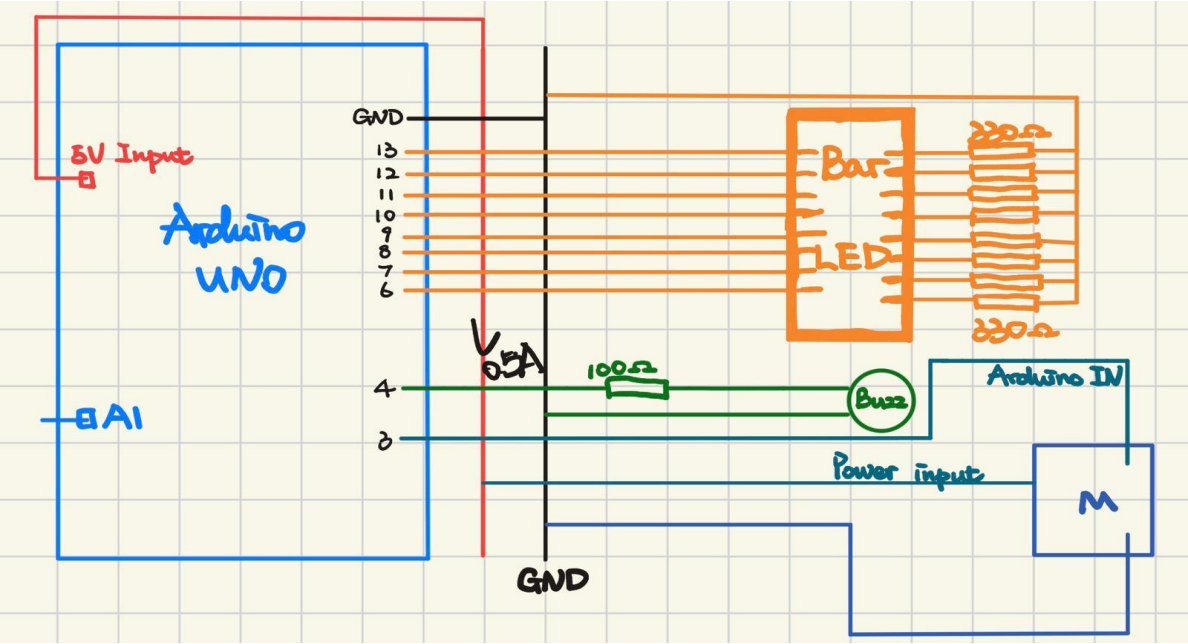

BOM

1uF Capacitor	6	0.6
100nF Capacitor	2	0.16
16nF Capacitor	1	0.1
10nF Capacitor	1	0.08
1.6nF Capacitor	1	0.1
1N4001G Diode	2	0.4
PP3 Battery	2	6.58
PP3 Battery Clip	2	0.6
LMC660CN/NOPB	1	2.5
LM324N	1	0.63
LEDs Bar	1	4.53
Servo motor	1	3.27
Buzzer	1	1.88
Arduino UNO - orange pip	1	18
UA741	2	0.34

510kohms Resistor	1	0.01
330kohms Resistor	1	0.01
150kohms Resistor	1	0.01
100kohms Resistor	2	0.02
82kohms Resistor	1	0.01
47kohms Resistor	5	0.05
18kohms Resistor	1	0.01
15kohms Resistor	10	0.1
330ohms Resistor	8	0.08
100ohms Resistor	1	0.01
50ohms Resistor	2	0.02
10ohms Resistor	3	0.03
		40.13

Arduino code structure

<u>Analogue input:</u> A1

- Read using analogRead(A1) = sensor_value
- **ADC resolution:** 10-bit → **0 to 1023** counts (maps to 0–Vref volts)

<u>Output pins used:</u>

- **LED bar: D6, D7, D8, D9, D10, D11, D12, D13** (8 LEDs)
- **Buzzer: D2**
- **Servo: D3** (servo control PWM signal)

<u>Behaviour & Activation threshold:</u>

- **LED bar (D6–D13):**
  - **LED mapping:** level = map(sensorValue, 0..200, 8..0) then setBarLevel(8 - level)
  - **Step size: ~25 ADC counts per LED**
  - **Saturation:** sensorValue ≥ 200 → **full bar**

- **Buzzer (D2):**
  - **Threshold:** sensorValue > 100
  - **Behaviour:** above 100 → **ON continuously**, else **OFF**

- **Servo (D3):** servo angle is proportional to activation: angle ≈ act·180° (0° at rest, up to 180° at strong contraction).
  - **Current threshold/behaviour: none in loop** (servo is attached but no write command, so it stays fixed
  - The motor drains too much current and severely affects the performance, so it is not implemented in the final design.

Other results:

Transient Response (Simulation):

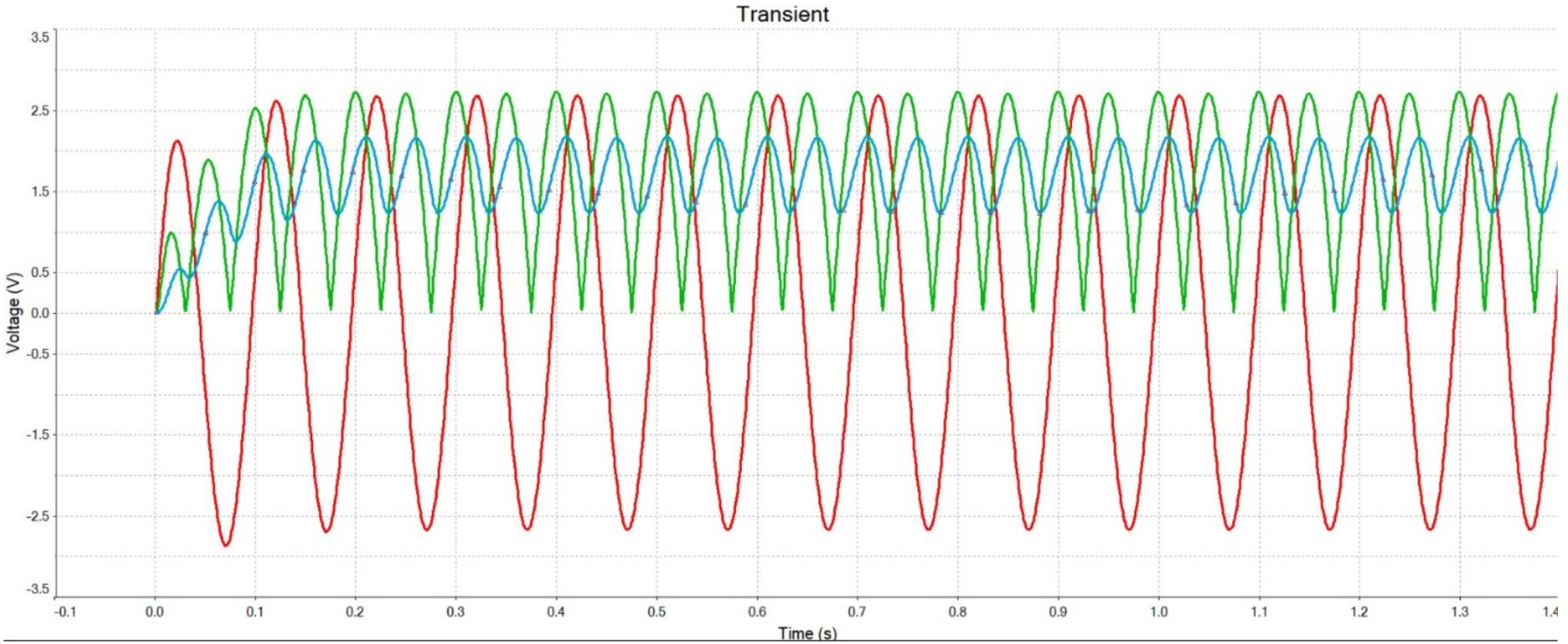

Test & Results

Arduino live Plot:

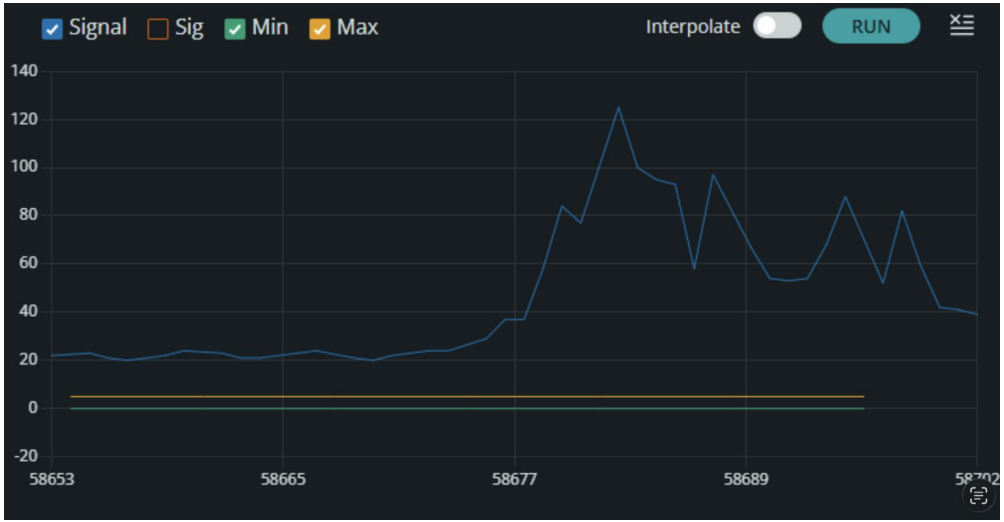

Frequency response:

(Simulation)

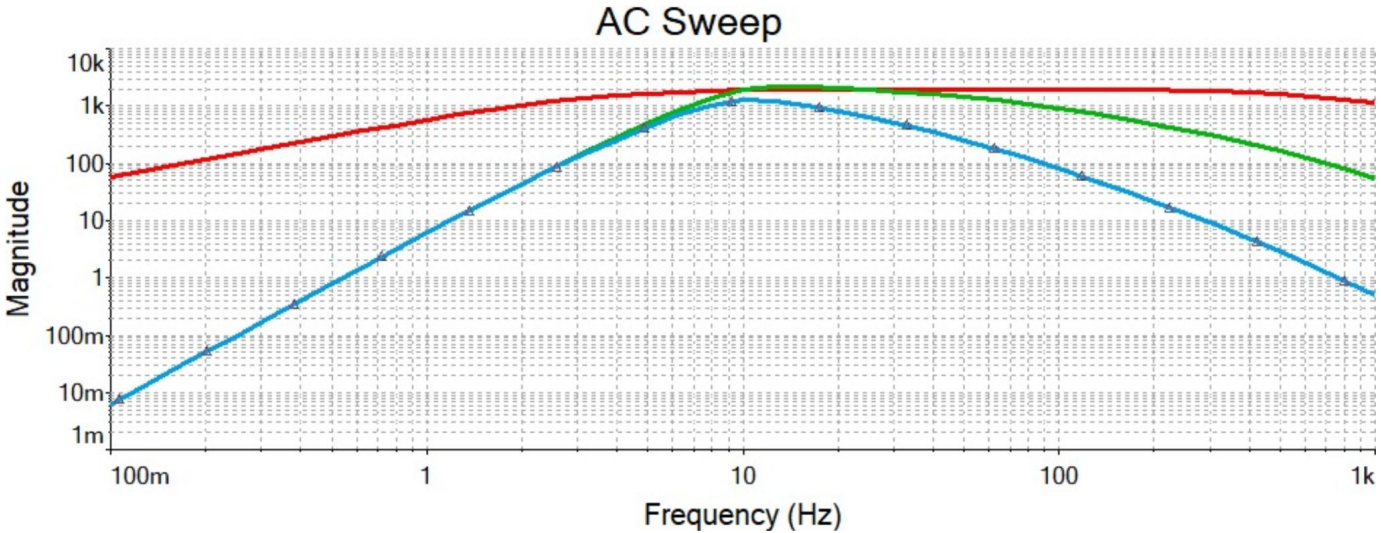

Power & Noise Analysis

Power:

- Battery 1 (0V~9V): 44.5mA~140mA -> 0.4W~1.26W
- Battery 2 (-9V~0V): ~3.7mA -> 0.033W
- Motor: ~0.3A -> ~1.8W
- Overall (without motor): 0.043W ~ 1.29W
- Most power are consumed by Arduino and output circuits

Noise:

- **Noise Type:** Low & high frequency noise when electrodes are not connected (circuit interference noise):

  Noise detected by ADC is less than 5mV

- **Noise detected by ADC when electrodes are connected:**

- Electrodes picks up a lot of noise, around 20mV rms
- Estimated SNR for the system: 36.9dB

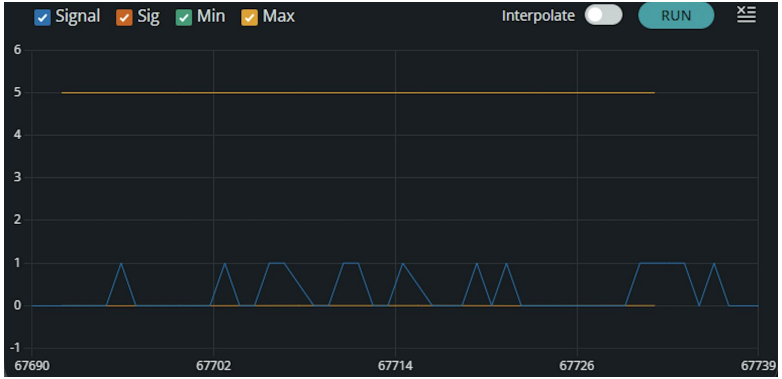

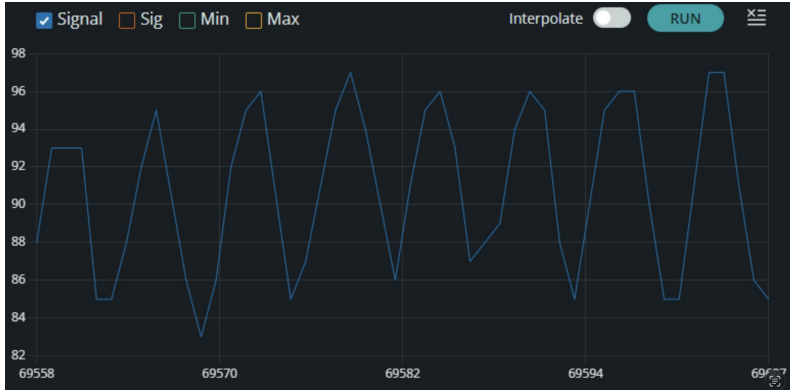

Gantt chart: Timeline of project

Tasks	13-Jan-26		14-Jan-26		15-Jan-26		16-Jan-26	
	AM	PM	AM	PM	AM	PM	AM	PM
Finalize circuit design with calculated component values for all stages								
Create detailed component list with exact specifications								
Collect and verify all parts from laboratory technicians								
Prepare breadboard layout and power supply setup								
Build analogue circuit systematically: amplifier → filters → rectifier ⇒ Jiangtian								
Test each stage with signal generator to verify functionality								
Connect to Arduino and implement basic ADC reading code								
Program initial LED bar: Mathis								
Program initial buzzer: Minjae								
Program initial servo motor responses to signal levels: Yifei								
Test with actual EMG electrodes on forearm muscles								
Adjust software thresholds and output mapping functions								
Optimize sensitivity for smooth, intuitive control responses								
Record demonstration videos and performance data for documentation								
Final System Check & Calibration								
Record Demonstration Videos								
Prepare Final Presentation Slides								
Presentation Rehearsal								
Setup Demonstration Area and final Verification								
	All together	Mathis	Yifei	Minjae	Jiangtian			